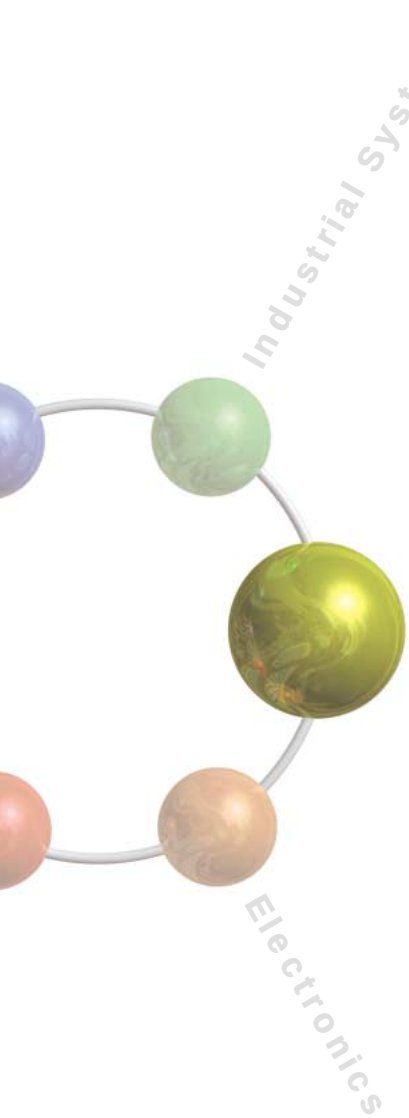


# Power Systems

Nuclear Power

Thermal and Hydraulic Power

Electric Power Distribution

# Saskatchewan Power Corporation, Queen Elizabeth Repowering Project, Canada

Hitachi, Ltd. delivered six H-25 gas-turbine units to Saskatchewan Power Corporation of Canada. The first unit started commercial operation in January 2002, and the last unit started commercial operation in June 2002. This project was contracted on June 2000 as a full turn-key project. Hitachi formed a consortium with SNC-Lavalin and worked together with Marubeni Canada Ltd. on this project.

Two existing steam-turbine units have been converted to combined cycle plant by using the exhaust heat gas from the six H-25 gas turbine units. The main features of this project are as follows.

(1) Hitachi's first experience of exporting H-25 gas turbines to North America

(2) Environmental regulations ($NO_x$ 25 ppm) are satisfied by using a low $NO_x$ combustor.

(3) All H-25 gas turbines were assembled at Hitachi Canadian Industries, located near the power station in Saskatoon.

Main specifications:

(a) Gas turbine: Model H-25

(b) Fuel: natural gas

(c) Output: 24,210 kW/unit

Indoor view of the H-25 gas-turbine units

# 700-MW Power-generation Equipment for Unit 4 of the Tomatoh-Atsuma Power Station Delivered to Hokkaido Electric Power Co., Inc.

Tomatoh-Atsuma Power Station

Unit 4 (700 MW) of the Tomatoh-Atsuma Power Station, which has the largest capacity of all single units operated by Hokkaido Electric Power Co., Inc., began its commercial run in June 2002.

With Units 1, 2, and 3 already in commercial operation, the Tomatoh-Atsuma Power Station now produces a total output of 1,735,000 kW, thus becoming Hokkaido's largest power plant in supplying about one-third of Hokkaido's power demand. Regarding Unit 4, Hitachi, Ltd. was contracted to manufacture, deliver, install, and test run the equipment for the turbine power generation (the main part of the machinery) and for the electrostatic precipitator.

The power generation equipment was designed using leading-edge technology. As a result, it is highly efficient and reliable, and enables us to meet our target plant efficiency of 49.5–49.9%. The eco-friendly super-low-temperature system is used, and a colder side electrostatic precipitator with mobile electrodes was used to combine high-dust collection efficiency with a compact layout.

# CFE Tula 111.3-MW Unit-6 Steam Turbine-generator Set for a Power Station in Mexico

A steam turbine-generator set for a combined-cycle power plant was supplied to the CCC Tula Power Station of the CFE (Comisión Federal de Electricidad) and put into commercial operation in June 2002. This power station is located near Mexico City, the biggest city in Mexico. Hitachi, Ltd. received an order from ITOCHU Corporation for replacing a steam turbine-generator set (made by another company) for combined-cycle block 2.

The steam turbine-generator set was supplied within 18 months of the purchase order and put into commercial operation with a background of tight electrical power demand. It utilizes newly introduced turbine rotor-stator combined transportation, and several limitations were overcome in meeting a short completion deadline.

Main specifications:

(1) Rated capacity and type: 111.3-MW, impulse-type tandem compound single-flow exhaust reheat condensing turbine

(2) Turbine: one shaft; last-stage blade length: 850 mm (33.5 inch)

(3) Main steam pressure: 8.33 MPa (abs); temperature at main stop valve: 507.8°C

(4) No. of extractions: one stage

(5) Exhaust pressure: 8.47 kPa (abs)

Turbine rotor-stator combined transportation ready for shipment

# H-25 Type Gas Turbines Supplied to Delta II Power Station of NEPA, Nigeria

Outdoor View of the H-25 type gas turbines in Delta II Power Station

An H-25 type gas-turbine power-generation set was supplied to the Delta II Power Station in the Federal Republic of Nigeria and put into commercial operation in March 2002. Hitachi, Ltd. received an order from NEPA (National Electric Power Authority) to replace six existing gas turbines with six new H-25 type gas-turbines developed by Hitachi, Ltd. It took about twelve months from the purchase order to the hand-over of the set.

To meet the urgent electric-power demands of the surrounding areas, six more existing gas turbines in the Delta III Power Station are expected to be replaced in the same way.

Main equipment specifications:

(1) Gas Turbine

Type: H-25 (heavy-duty type)

Output: 23,780 kW

Fuel: natural gas

(2) Generator

Type: open-ventilated air-cooled type

Output: 29,725 kVA

Exciter type: brushless exciter

# Performance Evaluation Through a Thorough Measurement of a 250-MVA Class Air-Cooled Turbogenerator

Customers are often concerned with the long-term reliability of power plants. While our 250-MVA class air-cooled turbogenerator achieved an efficiency of over 98.8%, the temperature performance was kept in the B class. Over 1,000 temperature and ventilation sensors were set in the test generator to further evaluate its performance and to further acquire data for much better designs.

After identifying the critical points and setting the sensors, the generator's operational performance was evaluated. This included the flow quantity in the air gap and the temperature in the rotor/stator strands. These values were positively correlated with the calculated values. This performance-based assessment study will assist in assuring the long-term reliability of the generator.

The number of points where sensors were set are as follows:

(1) Air gap ventilation: 77 points

(2) Field coil: 166 points

(3) Stator coil end: 48 points

(4) Others: 800 points

Among them, we concentrated on flow and temperature distribution in the air gap. The ventilation calculation showed that the key is the flow quantity in the air gap. Temperature builds up along the gap's path because air has a small heat capacity. Various kinds of heat sources exist in the gap, including the stator core, the rotor surface, and the exhaust. Since flow and temperature distribution are quite complicated in this region, we decided to measure the flow quantity and temperature distribution in the air gap.

An example of a sensor setting is shown below. Since the rotor in the actual test stand had no anemometers, Pitot tubes with 5 holes were inserted from the outer side of the ventilation ducts. These tubes detect the velocity and direction of the main stream. Summing up the measured ventilation distribution gives the total flow quantity in the corresponding cross section of the air gap.

In addition, the rotor and stator strand temperatures were directly measured. Temperature sensors embedded in the rotor winding detected the hottest temperatures there. With the use of 166 sensors, we were able to determine the most critical parts of the rotor. During the test, the field current was set to the rated load condition. This full load test is usually conducted due to the need to achieve a load comparable to 250 MVA, which usually cannot be achieved at a workshop. Conducting this full load test enabled us to evaluate the file coil performance.

For the stator, over 100 temperature sensors were embedded. Of these, 48 were located at the coil end where temperatures should be high, but where measurement is not easy because of the high voltage level there. Optical temperature sensors were introduced for this portion and detected the highest temperatures there. For the stator also, even the hottest strand temperature was well below the class B limit.

For the generator as a whole, the temperature was well within the limits determined by the insulation.

With over 1,000 points of temperature and ventilation measurement, the 250-MVA class air-cooled turbogenerator was evaluated. This measurement successfully demonstrated splendid results. Besides the high efficiency, the long-term reliability of the 250-MVA generator was assured.

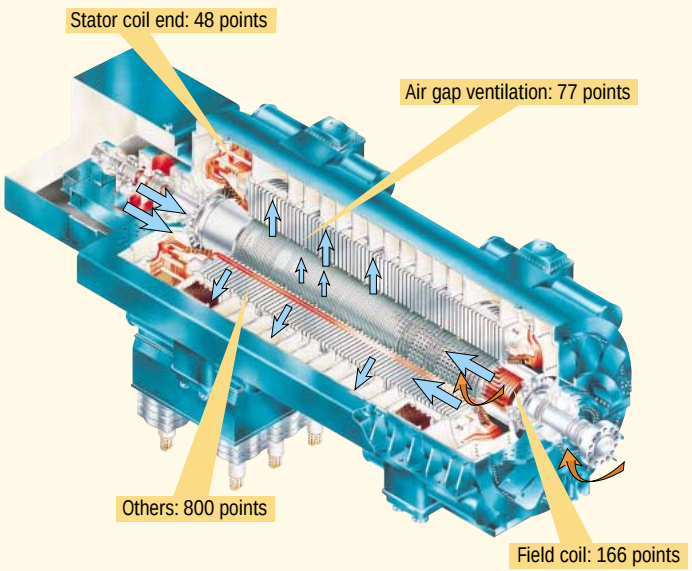


Points of measurement

# Protection and Control System for Open Network

A newly developed protection and control system for electric power not only detects and eliminates abnormal phenomena, in order to maintain a sound and reliable power supply, but also facilitates the optimal control of electric power equipment. Improved efficiency in maintaining electric power equipment and reduced equipment costs, along with the highly reliable and stable supply of electric power, are the primary requirements for electric power protection system. To meet these requirements, Hitachi, Ltd. has commercialized a protection and control system (MD series) that can deal effectively with an open network in accordance with internationally recognized IEC standards.

The primary feature of this system is that it uses a network protocol (IEC60870-5-104) based on TCP/IP that supports both protection and control in conformity. This protocol enhances the connectivity with any substation control system (SCS), even enabling the system to be used with devices from different manufacturers, and also makes it easy to expand and modify the system.

Moreover, the improved user interface facilitates the intuitive use of the system during setting up and controlling operations.

The second feature of the system is that integrating all the functions into a single unit realizes both downsizing and weight reduction.

These features have led to the following advantages: downsizing of the system itself; reduction in power consumption; cost reduction; and other benefits. The downsizing and weight reduction have been realized through three approaches: firstly, increasing the functionality and integration of the system through the use of a microprocessor with a large-capacity flash memory built in; secondly, adopting a toroidal core for CTs (current transformers) and VTs (voltage transformers); and thirdly, adopting a low power-consumption design.

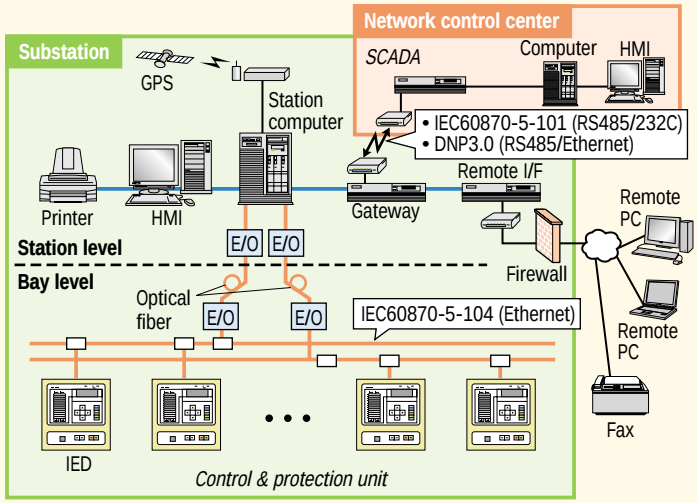


SCADA: supervisory control and data acquisition
HMI: human-machine interface
GPS: global positioning systems
I/F: interface
E/O: electrical/optical
IED: intelligent electronic device

Configuration of protection and control system for an open network

# Newly Developed Switchgear for 22-kV Power Distribution

As regards the power-distribution system in Japan, the distribution voltage is mostly set at 6.6 kV, except for some high-density areas. Upgrading the distribution voltage from 6.6 kV to 22 kV has become an important issue in response to the increasing electric-power demand in the urban areas and the need to decrease power loss. To expand the existing 22-kV distribution area, low cost and compact equipment that meet the same standard as the 6.6-kV apparatus are necessary. In response to this issue, Hitachi has developed an extremely compact type of switchgear. Its key feature is a multi-functional integration concept, where the four positions—closed, circuit breaker (CB) open, disconnecting switch (DS) open, and earthing—are possible in a single unit vacuum vessel. The volume size of the new switchgear is significantly reduced to 6% of that for our conventional air-insulated types.

Main switchgear characteristics:

(1) Very compact

(2) Installation in outdoor dirty environments possible because the main circuits (four-position switchgear, bus-bar, and bushing) are housed in an epoxi-resin molded case.

(3) Meets environmental regulations concerning $SF_6$ gas

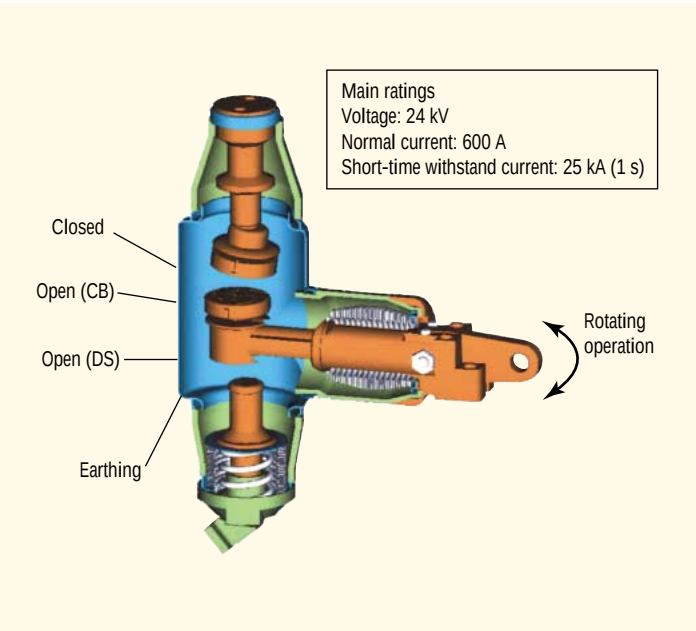


Internal construction of the new 22-kV switchgear

# Main Control Systems Delivered for Fukushima Daini Nuclear Power Station Unit No. 4 of Tokyo Electric Power Co., Inc.

Main control systems have been delivered for Fukushima Daini Nuclear Power Station Unit No. 4 of Tokyo Electric Power Co., Inc. in Japan. This set of systems consists of automatic power regulator, main turbine EHC, recirculation flow-control system, and control-drive. It replaces first-generation digital control systems for nuclear power delivered about 15 years ago.

These systems directly control nuclear reactor output. A function-check test performed on the premises for all control systems combined has confirmed systems reliability.

The delivered control systems feature downsized hardware (50% less installation space) and easy maintenance (a trace-back function that saves process history and no drift due to digitization of servo circuits).

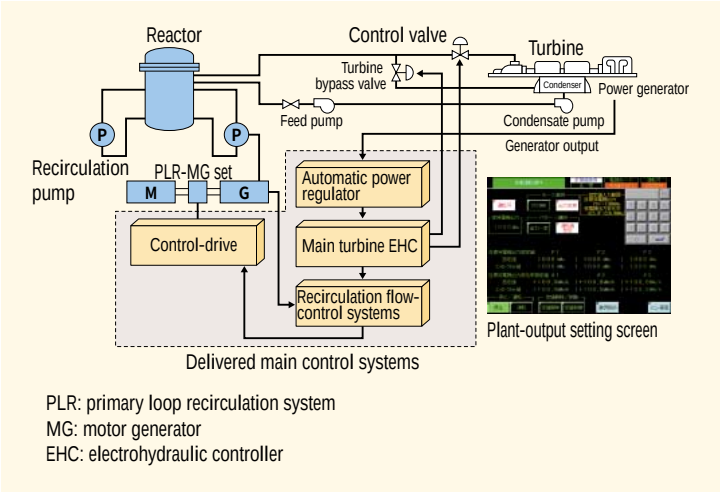


Main control systems for Fukushima Daini Nuclear Power Station Unit No. 4 of Tokyo Electric Power Co., Inc.

# Control Center System for Tohoku Electric Power Co., Inc.

Hitachi, Ltd. delivered a supervisory control and data acquisition (SCADA) system on March 2002 for the Kitakami control center of Tohoku Electric Power Co., Inc. (EPCO)

The system consists of up-to-date servers/clients and SCADA functions with network applications, historical data handling, and switching order generation functions on the Hitachi dependable open real-time architecture (DORA), which provides basic SCADA components and middleware functions such as information models, a real-time distributed database, and configuration control functions.

Tohoku EPCO is an electric utility company whose control area is the northern part of Honshu island in Japan. Tohoku EPCO has decided to change the organization of the network management section and to integrate control centers to a number of control centers so as to advance in operational and maintenance efficiency.

The system is the first for control centers in Tohoku EPCO after the reorganization.

Tohoku EPCO will take advantage of its efficient network operations while maintaining reliability of power supply to its customers by this control center system.

Power control and monitoring system delivered to Tohoku Electric Power Co., Inc.