2005/10/14 Release

Verification of new Sensor Net communication system using 3-nanoW/bps low-power UWB radio transmission

- Data rate of 10 Mbps confirmed for 10m coverage -

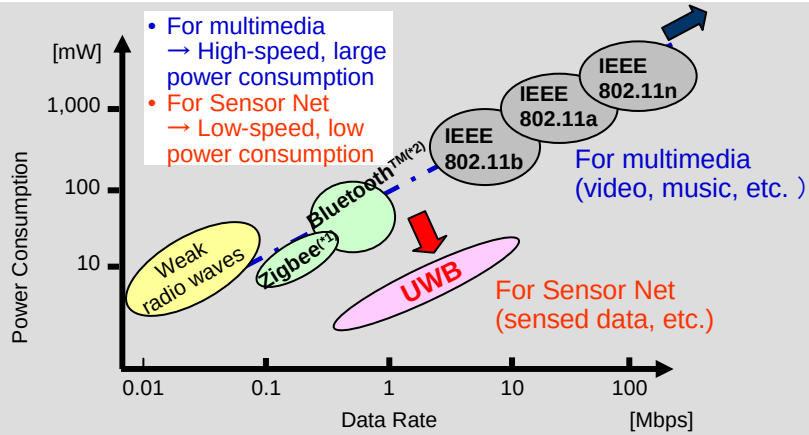

Comparison of data rates & power requirements for wireless data communication system

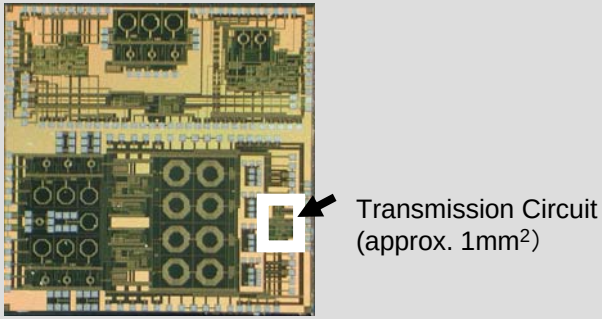

Prototype transmission RF-IC fabricated using 0.18 μm CMOS process

(Verified LSI power consumption as 3 nanoW/bps for transmission)

Hitachi, Ltd., in cooperation with YRP Ubiquitous Networking Laboratory, have succeeded in utilizing UWB radio frequency (ultra-wideband; a 100 times wider bandwidth than that used in cellular phones) for the Sensor Net, with extremely low power consumption. This technique is part of the proposed IEEE standard for Sensor Net wireless communication technology, currently receiving much attention. Low power radio transmission consuming 3 nanoW/bps (1 nano = 10^{-9}) , and wireless communication (send & receive) at a data rate of 10 Mbps for a distance of 10m and 250 kbps for a distance of 30m have been verified, as well as confirming 30cm positioning accuracy using simulation.

*1) ZigBee is a registered trademark of the ZigBee Alliance.
*2) Bluetooth™ is a trademark of the Bluetooth SIG (Special Interest Group), Inc., and is employed by Hitachi, Ltd. through a licensing agreement.

© 2005 Hitachi, Ltd., Research & Development Group. All rights reserved.